M-Zert
Zertifiziertes QM-System
DIN EN ISO 9001
Zertifikat-Nr. 01017

Direct Mass Flow Meter and Controller

for Gases

KOBOLD

measuring • monitoring • analysing

DMW

- Measuring ranges from 0.005...6000 Nl/min air
- Accuracy: ±3% of full scale
- p_{max}: 10 bar; t_{max}: 50 °C
- Connections: G ¼, G ½, G1
- Sensor housing: Aluminium or stainless steel
- Output: 4 - 20 mA, 0 - 5 V_{DC}
- Quick response time
- Insensitive to soiling and humidity

KOBOLD companies worldwide:

ARGENTINA, AUSTRIA, BELGIUM, BULGARIA, CANADA, CHILE, CHINA, COLOMBIA, CZECHIA, DOMINICAN REPUBLIC, EGYPT, FRANCE, GERMANY, GREAT BRITAIN, HUNGARY, INDIA, INDONESIA, ITALY, MALAYSIA, MEXICO, NETHERLANDS, PERU, POLAND, ROMANIA, SINGAPORE, SOUTH KOREA, SPAIN, SWITZERLAND, TAIWAN, THAILAND, TUNISIA, TURKEY, USA, VIETNAM

KOBOLD Messring GmbH
Nordring 22-24
D-65719 Hofheim/Ts.
Head Office:
+49(0)6192 299-0
+49(0)6192 23398
info.de@kobold.com
www.kobold.com

1/09-2013

Description

The new model DMW-... direct mass flow meter has been specially designed for use in gas measuring technology. An inexpensive analogue output is fitted.
The model DMW is available in three versions: with or without integrated 3½-digit LCD display or with a 8-digit counter.
The direct stream procedure is ideally suited for measurements from 5 Nl/min (max.) up to7500 Nl/min air (model: DMW-B*876). In case of small flow rates the measurements are taken with a bypass-system (DMW-A/C).
In contrast with most volumetric flow meters the mass flow meter DMW-... has no moving parts, and no temperature or pressure correction is required.
The meter may be installed in any position and the pressure loss is negligible. The simple mechanical construction ensures the highest degree of reliability when used with aggressive gases, and under tough industrial service conditions.

Application examples

- Monitoring of gases
- Counted consumption for accounting reason
- Varnishing facility
- Coating facility
- Semiconductor industry
- Laboratories and research
- Gas indication panels
- Mechanical engineering
- N2/O2 generators
- Burner controller

Technical Details

Measuring system:	Direct stream and Bypass
Measuring range:	5 ... 100 %
Gas type:	all gases, depending on the combatibility with wetted parts
Accuracy (with calibration for air):	±3 % of full scale incl. non-linearity
Repeatability:	±0,5 % of full scale (others on request)
Time constant (63.2 %):	τ = 0.7 s (standard, others on request)
Display:	3 ½-digit LCD (flow rate); 8-digit LCD (counter)
Pressure coefficient:	0.3 % / bar typically (air)
Temperature coefficient:	±0.3 % °C
Temperature:	0 ... 50 °C
Pressure:	10 bar; higher on request
Leakage rate:	<2 x 10^{-7} mbar l/s He
Preheating time:	30 minutes for optimal accuracy; 30 s for accurcy ±4% of full scale
Mounting position:	any, flow rate in arrow direction
Inlet section:	not necessary only „LOW DP-version“ 10xD
kv_s-values controller:	0.066; 0.3; 1.0; 1,1; 2.8; 3.4 (DMW-C/D)

Materials

Sensor:	Stainless steel 316L
Casing:	Stainless steel 316L or Aluminium (anodized)
Filter/rings:	Stainless steel 304 /PTFE
Seal:	FPM, EPDM or FFKM
Power supply:	24 V_{DC} ±10%

Max. current values

DMW-A/C:	75 mA max.
DMW-B/D:	current input 250 mA max. without flow 75 mA max. 100% flow rate 175 mA max.
With valve control:	+250 mA max.
Signal input (with controller only):	Poti, 0 ... 5 V_{DC} or 4 ... 20 mA
Signal output:	0 ... 5 V_{DC} or 4 ... 20 mA aktive
Connector:	round pin plug/opposite plug, 6-pole DIN

No responsibility taken for errors; subject to change without prior notice.

1/09-2013

Technical Details (continuation)

Protection:	IP 40; IP 65 (option)
Special design (on request):	»Low ΔP« version, dry and oil-free; »fast response« version; digital design with Bus connection
Special calibration (on request):	for example: H_2, helium, CO_2, methane, propane, butane, argon (no oxygen)

Informations for request and order

To be able to find out the suitable instrument for your application, we ask for the following technical details:

- Gas type, measuring range
- Operating temperature and pressure (for controller, upstream and downstream pressure)
- Required output signal
- Seals

Based on this information, the following calculations or examinations are carried out:

- Converting of the desired gas-flow, based on air (the desired flow is divided by the adequate converting factor).
- Only for controller: Examination, whether the pressure difference over the valve (ΔP) is an acceptable range.
- Only for controller: Examination, whether the calculated KV-value is inside the specification.

Order Details mass flow meter (Example: **DMW-A71 12 G2 F 3 2**)

Measuring system	Measuring tube	Sensor housing		Measuring range [Nl/min air]*	Connection
		Aluminium	St. steel		
Bypass flow meter	small	**DMW-A71...**	**DMW-A21...**	..**12**.. = 5.0…100.0 Nml/min ..**22**.. = 10.0…200.0 Nml/min ..**52**.. = 0.025...0.500 ..**13**.. = 0.050...1.000 ..**23**.. = 0.100...2.000 ..**53**.. = 0.25...5.00 ..**14**..= 0.50...10.00	..**G2**.. = G ¼ female
Direct stream flow meter	4 mm	**DMW-B70...**	**DMW-B20...**	..**14**.. = 0.50...10.00 ..**24**.. = 1.00...20.00	..**G2**.. = G ¼ female
Direct stream flow meter	8 mm	**DMW-B71...**	**DMW-B21...**	..**24**.. = 1.00...20.00 ..**54**.. = 2.5...50.0 ..**15**.. = 5.0...100.0	..**G2**.. = G ¼ female
Direct stream flow meter	16 mm	**DMW-B72...**	**DMW-B22...**	..**15**.. = 5.0...100.0 ..**25**.. = 10.0...200.0 ..**45**.. = 20...400	..**G4**.. = G ½ female
Direct stream flow meter	32 mm	**DMW-B73...**	**DMW-B23...**	..**45**.. = 20...400 ..**16**.. = 50...1000 ..**26**.. = 100...2000	..**G4**.. = G ½ female
Direct stream flow meter	56 mm	**DMW-B75...**	**DMW-B25...**	..**26**.. = 0.10...2.00 Nm^3/min ..**46**.. = 0.20...4.00 Nm^3/min ..**56**.. = 0.25...5.00 Nm^3/min	..**G6**.. = G 1 female
Direct stream flow meter	84 mm	**DMW-B78...**	**DMW-B28...**	..**56**.. = 0.25...5.00 Nm^3/min ..**66**.. = 0.30…6.00 Nm^3/min	..**G6**.. = G 1 female

* Nl = Norm Litre at 1013 mbar and 0 °C

L_S= Standard Litre at 1013 mbar and 20 °C (others on request)

Measuring ranges also available in Nm^3/min, Nm^3/h, Nl/h or others.

Seal	Indication/protection	Output
..**F**.. = FPM ..**E**.. = EPDM ..**P**.. = FFKM	..**3**.. = without indication, IP40 ..**6**.. = without indication, IP65 ..**D**.. = flow rate indication, IP40 ..**Z**.. = counter, IP40	..**2** = 0 - 5 V_{DC} ..**4** = 4 - 20 mA

No responsibility taken for errors;
subject to change without prior notice.

Order Details mass flow controller (Example: **DMW-C71 12 G2 F 3 2**)

Measuring system	Measuring tube	Sensor housing		Measuring range [Nl/min air]*	Connection
		Aluminium	St. steel		
Bypass flow meter	small	**DMW-C71...**	**DMW-C21...**	..**12**.. = 5.0…100.0 Nml/min ..**22**.. = 10.0…200.0 Nml/min ..**52**.. = 0.025...0.500 ..**13**.. = 0.050...1.000 ..**23**.. = 0.100...2.000 ..**53**.. = 0.25...5.00 ..**14**..= 0.50...10.00	..**G2**.. = G ¼ female
Bypass flow meter	medium	**DMW-C72...**	**DMW-C22...**	..**14**.. = 0.50...10.00 ..**24**.. = 1.00...20.00 ..**54**.. = 2.5...50.0	.**G4**.. = G ½ female
Direct stream flow meter	4 mm	**DMW-D70...**	**DMW-D20...**	..**14**.. = 0.50...10.00 ..**24**.. = 1.00...20.00	..**G2**.. = G ¼ female
Direct stream flow meter	8 mm	**DMW-D71...**	**DMW-D21...**	..**24**.. = 1.00...20.00 ..**54**.. = 2.5...50.0 ..**15**.. = 5.0...100.0	..**G2**.. = G ¼ female
Direct stream flow meter	16 mm	**DMW-D72...**	**DMW-D22...**	..**15**.. = 5.0...100.0 ..**25**.. = 10.0...200.0 ..**45**.. = 20...400	..**G4**.. = G ½ female
Direct stream flow meter	32 mm	**DMW-D73...**	**DMW-D23...**	..**45**.. = 20...400 ..**16**.. = 50...1000	..**G4**.. = G ½ female

Seal	Indication/Protection	Input/Output
..**F**.. = FPM ..**E**.. = EPDM ..**P**.. = FFKM	..**3**..= without indication, IP40 ..**6**..= without indication, IP65 ..**D**..= flow rate indication, IP40 ..**Z**..= counter, IP40	..**2** = 0 - 5 V_{DC} ..**4** = 4 - 20 mA ..**6** = Poti /0 - 5 V_{DC} (up to 100 l/min) ..**8** = Poti /4-20mA (up to 100 l/min)

Pressure loss diagram

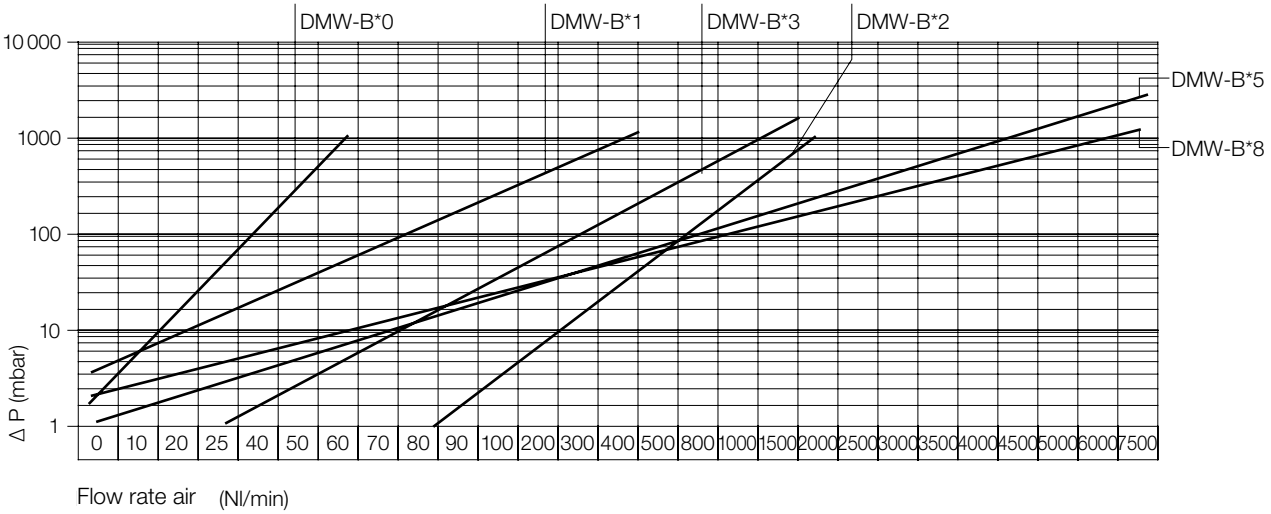

No responsibility taken for errors;
subject to change without prior notice.

1/09-2013

Dimensions

DMW-A..., DMW-B*0..., DMW-B*1..., DMW-B*2...

Model	B	C	F	G
DMW-A...	G ¼	G ¼	95	96
DMW-B*0..	G ¼	G ¼	95	96
DMW-B*1...	G ¼	G ¼	95	96
DMW-B*2...	G ½	G ½	99	100

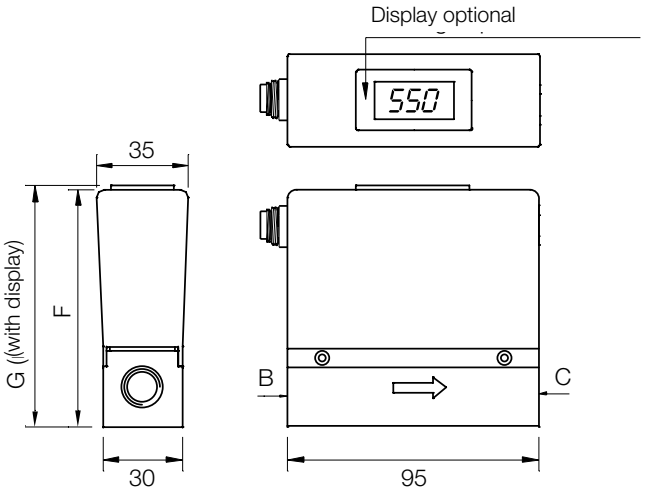

DMW-B*3..., DMW-B*5..., DMW-B*8...

Model	A	B	C	D	E	F	G	H
DMW-B*3...	116	G ½	G ½	50	50	123	124	35
DMW-B*5...	130	G 1	G 1	70	70	143	144	35
DMW-B*8...	160	G 1	G 1	100	100	172	173	35

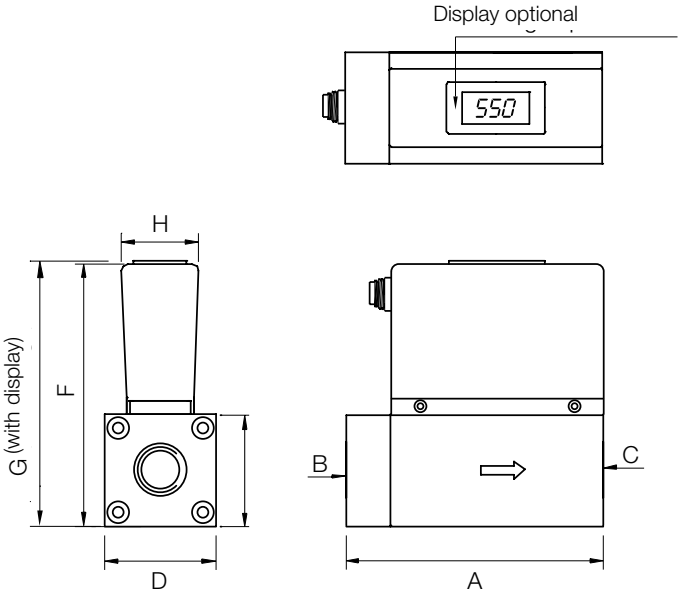

No responsibility taken for errors;
subject to change without prior notice.

DMW-C*1..., DMW-C*2..., DMW-D*0..., DMW-D*1...

Model	A	B	C	D	F	G	H
DMW-C*1...	95	G ¼	G ¼	30	95	96	35
DMW-C*2...	95	G ½	G ¼	30	97	98	35
DMW-D*0...	95	G ¼	G ¼	30	95	96	35
DMW-D*1...	95	G ¼	G ¼	30	95	96	35

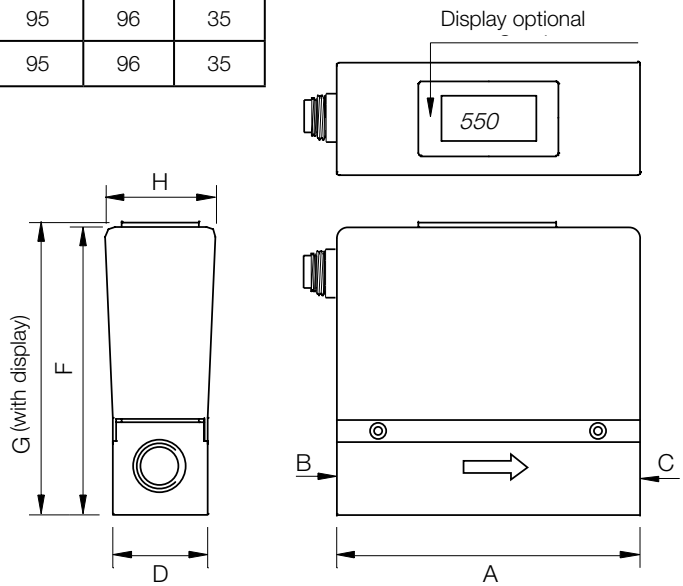

DMW-D*2..., DMW-D*3...

Model	A	B	C	D	F	G	H
DMW-D*2...	145	G ½	G ½	50	131F	45F	44
DMW-D*3...	-	G ½	G ½	Dimensions upon request			

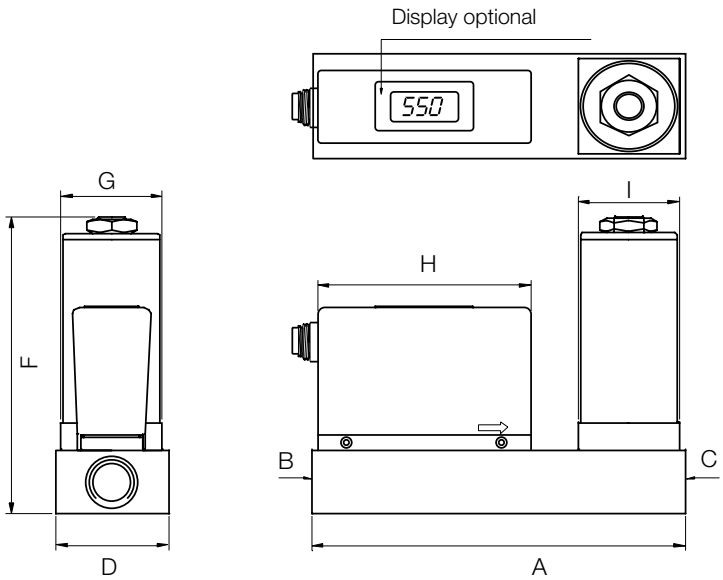

No responsibility taken for errors;
subject to change without prior notice.

1/09-2013