M-Zert
Zertifiziertes QM-System
DIN EN ISO 9001
Zertifikat-Nr. 01017

Pressure Transmitter with Digital Display

KOBOLD

measuring • monitoring • analysing

PDA-15

PDA-25
PDA-35

- Measuring range:
  -1 ... 0 to 0 ... 400 bar
- Temperature:
  max. 80 °C
- Accuracy:
  ±0.5 % FS (±1.0 % FS)
- Housing material:
  Stainless Steel
- Connection:
  G ¼, G ½ male
  ¼ NPT or ½ NPT

KOBOLD companies worldwide:
ARGENTINA, AUSTRIA, BELGIUM, CANADA, CHILE, CHINA, CZECH REPUBLIK, FRANCE, GERMANY, GREAT BRITAIN, INDONESIA, ITALY, MALAYSIA, MEXICO, NETHERLANDS, PERU, POLAND, SWITZERLAND, SINGAPORE, SLOVAKIA, THAILAND, USA, VENEZUELA, VIETNAM

KOBOLD Messring GmbH
Nordring 22-24
D-65719 Hofheim/Ts.
☎ +49(0)6192 299-0
Fax +49(0)6192 23398
E-Mail: info.de@kobold.com
Internet: www.kobold.com

Model:
PDA

Description

KOBOLD pressure transmitter series PDA are cost effective electronic pressure transmitters with digital indication of actual pressure. An analogue output (0)4 - 20 mA is available for remote transmission of the measured value. The device is also available with a swit output as well.
A piezzo resistive ceramic sensor is used. The units can be used where high switching accuracy is needed. Long term stability, repeatability and the compact and robust design makes them ideal for use in OEM applications.

Dimensions

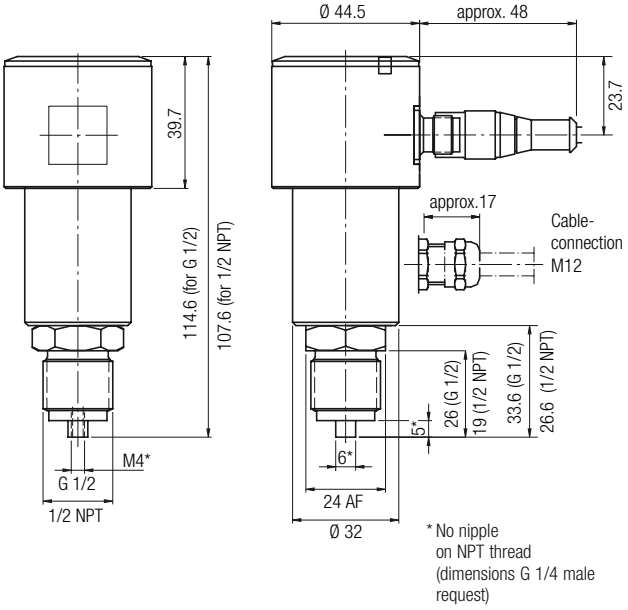

Applications

- Compressors
- Machinery industry
- Installations
- Pumps

Technical Details

Housing:	Stainless Steel 1.4305
Connections:	G ¼ or G ½ male; St. St. 1.4404 Option: ¼ NPT or ½ NPT, others on request
Gasket:	FPM (Option: EPDM)
Sensor element:	piezzo resistive ceramic cell
Indication:	3-digit LED, 7 mm
Resolution:	max. 0.01 bar (depending on measuring range and measured value)
Max. temperature:	Media: - 20 to + 80 °C Ambient: - 20 to + 80 °C
Max. over pressure:	up to 60 bar: 3 times from 100 bar: 2 times of the range 400 bar: 1.5 times of the range
Supply voltage:	24 V_{DC} ± 20 %
Power consumption:	approx. 120 mA (without switching output)
Electr. connection:	Plug M 12 x 1
Settings: (standard)	programmable via 2 buttons: ● 4 - 20 or 0 - 20 mA ● Start point / end point (current) ● Filter ● Zero point ● Security code
Overrange/ underrange indication:	on LED-display
Load:	max. 500 Ω
Switching output:	PNP or NPN semiconductor (factory set), max. 300 mA, short-circuit proof
Contact:	N/O or N/C, programmable
Switch. point adjustm.:	programmable via 2 buttons
Switching display:	programmable
Output indicator:	1 LED
Hysteresis:	adjustable via 2 buttons
ON/OFF-switch. delay:	0.5...99.5 (separately adjustable)
Response time:	0.5 s
Accuracy:	± 0.5 % f. s. (± 1 % of full scale for measuring range: B025 and B035)
Protection:	IP 65

Order Details (Example: **PDA-15 3 R2 C315**)

Model	Description	Output	Electrical connection	Mechanical connection	Measuring range*
PDA-	Pressure transmitter with digital display	**15** = Standard 0(4)-20 mA **25** = 0(4)-20 mA, PNP-Switching output **35** = 0(4)-20 mA, NPN-Switching output	**3** = plug M12x1	**R2** = G 1/4 **R4** = G 1/2 **N2** = 1/4 NPT **N4** = 1/2 NPT	**C315** = -1 to 0 bar **B025** = 0 to 1 bar **B035** = 0 to 1,6 bar **B045** = 0 to 2,5 bar **B055** = 0 to 4 bar **B065** = 0 to 6 bar **B075** = 0 to 10 bar **B085** = 0 to 16 bar **A095** = 0 to 25 bar **A105** = 0 to 40 bar **A115** = 0 to 60 bar **A125** = 0 to 100 bar **A135** = 0 to 160 bar **A145** = 0 to 250 bar **A155** = 0 to 400 bar

*PSI upon request

Additional: Electrical connection

Description	Model
M12x1 socket with 2 m cable	**ZUB-KAB-12K002**
M12x1 socket with Quickon-plug	**ZUB-KAB-12Q000**

No responsibility taken for errors;
subject to change without prior notice.
01 / 0805 / Ko / 10