JUMO tecLine Cl2

Sensor for free chlorine
Type 202630

B 202630.0

Operating manual

JUMO

2012-06-29/00394444

Screws coated with threadlocking paint must not be adjusted! The threadlocking paint must not be damaged. If it is, claims under the warranty will not be honored!

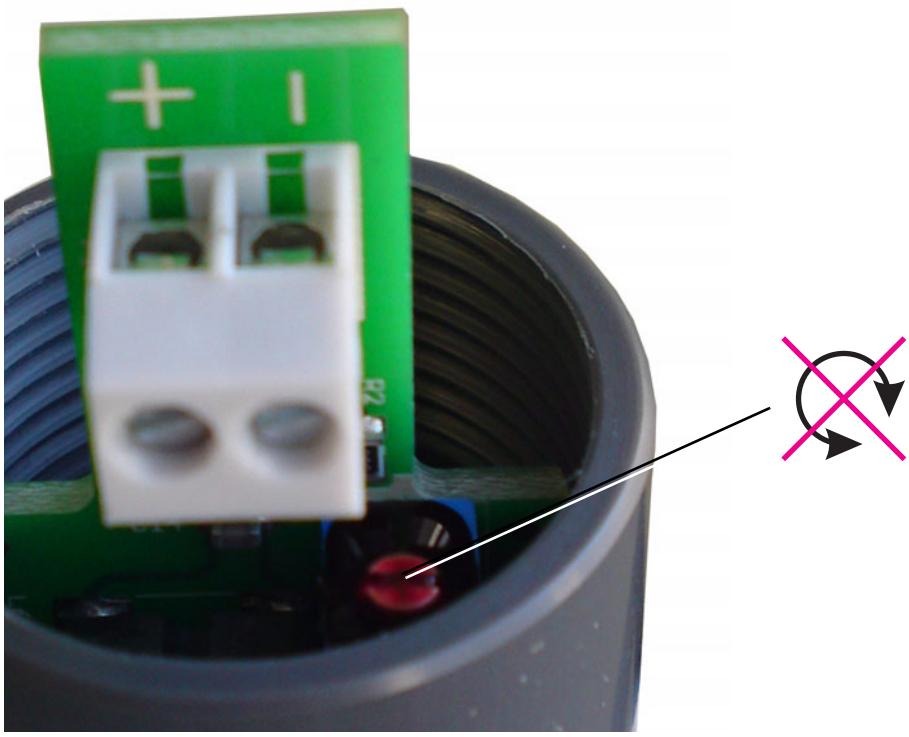

Contents

Contents

1.1 Warning signs

Caution

This sign is used when there may be **danger to personnel** if the instructions are ignored or not followed correctly!

Attention

This sign is used when there may be **damage to equipment or data** if the instructions are ignored or not followed correctly!

1.2 Note signs

Note

This sign is used to draw your attention to something **of special importance**.

abc[1]

Footnote

Footnotes are notes that **refer to specific passages** in the text. Footnotes consist of two parts:

Identification marking in the text and the footnote text.

The identification markings in the text are arranged as sequential superscript numbers.

∗

Action instruction

This sign indicates the description of an **action to be performed**.

The individual steps are marked by this asterisk.

Example:

∗ Press key.

2 General

2.1 Preface

Please read this operating manual before placing the device in operation. Keep the operating manual in a place which is accessible to all users at all times.

Danger:

Sudden failure of the sensor may result in dangerous overdosing of chlorine. Suitable preventive measures must be in place as needed to prevent this from happening.

Check the plant for odor of chlorine and check water for any unusual discoloration.

2.2 Scope of application

This membrane-covered, amperometric sensor is used to determine the concentration of free chlorine in water.

This sensor can only be used in media similar in quality to drinking or swimming pool water. Typical areas of application include swimming pools and monitoring of drinking water.

2.3 Output signal

Since the measurement signal of amperometric sensors is temperature-dependent, an integrated NTC resistor is provided for automatic temperature compensation. The recommended temperature range is +5 to +45 °C.

The integrated electronics of the sensor provides a current signal of 4 to 20 mA.

A downstream device (indicator, controller, recorder, PLC, etc.) is used for calibration.

The sensors can be connected directly to a suitable indicator and controller. The JUMO AQUIS 500 AS indicator/controller (type sheet 202568) and the JUMO dTRANS AS 02 indicator/controller (type sheet 202553) are especially suitable for combining with these sensors. They provide the voltage required for the power supply of the sensor and make for an easy way to calibrate the measuring system.

3.1 Nameplate

JUMO GmbH & Co. KG
Fulda, Germany
www.jumo.net

JUMO tecLine Cl2
Sensor for free chlorine
Type: 202630/40-20
Measuring range: 0.00 to 2.00 mg/l
F No. 00000000 00 0 1226 0005
Serial No.: 01 01 0002

Note:
The date of manufacture is encoded in the "F No." (manufacturing number): 1226 signifies: year of manufacture 2012 / calendar week 26.

3.2 Order details

			(1)	**Basic type**
		202630		Sensor
			(2)	**Basic type extension**
		40		for free chlorine
		41		for free chlorine (reduced pH-dependency)
			(3)	**Measuring range**
x		10		0.00 to 0.50 mg/l (ppm)
x	o	20		0.00 to 2.00 mg/l (ppm)
o	o	25		0.00 to 5.00 mg/l (ppm)
o	o	35		0.00 to 10.00 mg/l (ppm)

	(1)	/	(2)	-	(3)
Order code		/		-	
Order example	202630	/	40	-	20

4 Description

4.1 Scope of delivery

4.1.1 Type 202630/40

Two-wire sensor including membrane cap, electrolyte and special abrasive paper for cathode cleaning.

4.1.2 Type 202630/41

Two-wire sensor including membrane cap and device holder, electrolyte and special abrasive paper for cathode cleaning.

4.2 Description

These membrane-covered, amperometric sensors are used to measure the concentration of free chlorine in water.

The following inorganic chlorinating agents can be determined with the sensor for free chlorine: chlorine gas (Cl_2), electrolytically generated chlorine, sodium hypochlorite (NaOCl, chlorine bleach lye), calcium hypochlorite ($Ca(OCl)_2$) or chlorinated lime (Ca(OCl)Cl).

This sensor can only be used in media similar in quality to drinking or swimming pool water. Typical areas of application include swimming pools and monitoring of drinking water.

The sensor is not suitable for detecting the absence of chlorine.

The working electrode (cathode) is made of gold (Au). The anode, which performs the function of a combined reference electrode and counter electrode, is made of silver (Ag) fitted with a coating of silver halide (AgHal).

This sensor features a membrane-covered, amperometric 2-electrode measuring system.

In this measurement method the chlorine diffuses out of the process medium and through the membrane, inducing an electrical signal in combination with the electrolyte on the working electrode. The signal, which is proportional to the concentration of chlorine, is amplified by the electronics. Due to an integrated temperature compensation system, the measurement signal is independent of the medium temperature.

4.2.1 For type 202630/40

The membrane of the sensor is made of hydrophobic, microporous PTFE material. This sensor should only be used in water with drinking or swimming pool quality. The water should not under any circumstances contain surfactants (many cleaning agents and disinfectants contain surfactants). Surfactants will eliminate the hydrophobic properties of the membrane. Then proper functioning can no longer be guaranteed.

After calibration the pH value must be kept constant ($\Delta pH \leq 0.05$). In case of pH fluctuations ($\Delta pH > 0.05$), type 202630/41 of the measuring cell provides the option for free chlorine with reduced pH dependency.

4.2.2 For type 202630/41

If the sensor with a hydrophilic membrane is used, a test is required in this special case to determine whether the presence of surfactants results in a significantly reduced service life. In this case as well, however, the water quality should be similar to drinking or swimming pool water.

The measurement is pH-independent in the range from pH 5 to 7.

Since there must be an electrical connection between the counter electrode and the process medium, the minimum conductivity of the process medium must be approx. 10 µS/cm. It follows that the measuring cell is not suitable for use in high-purity water or similar applications.

4.3 Details

4.3.1 Type 202630/40

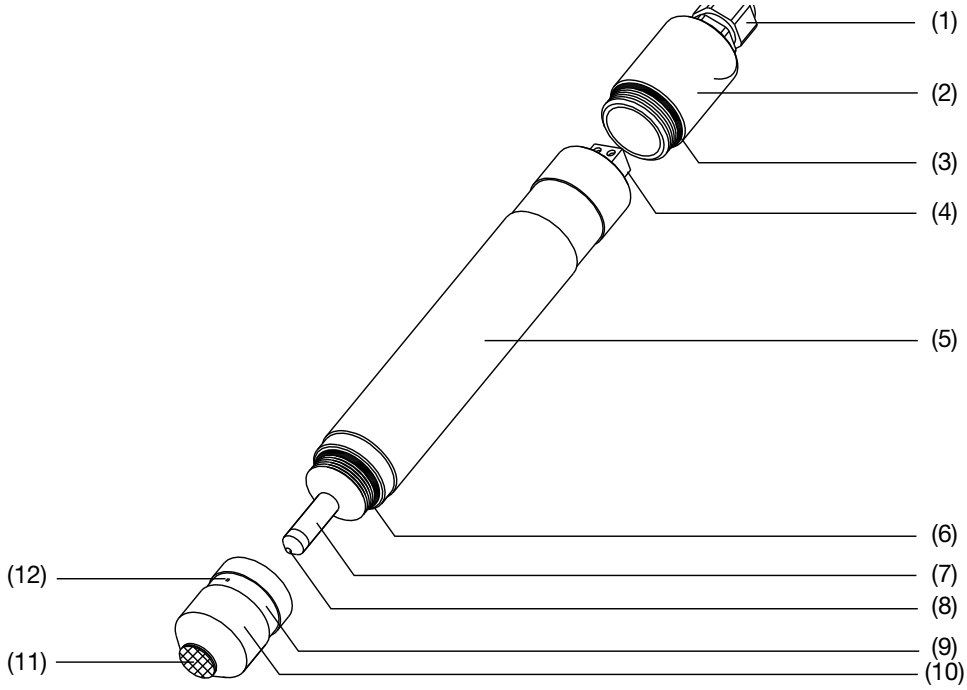

(1) Pg screw connection
(2) Cover
(3) O-ring
(4) 2-pin terminal for measuring cable connection
(5) Electrode shaft with integrated electronics
(6) O-ring
(7) Electrode finger (reference electrode)
(8) Measurement electrode
(9) Transparent cover
(10) Membrane cap
(11) PTFE membrane
(12) Valve opening

4.3.2 Type 202630/41

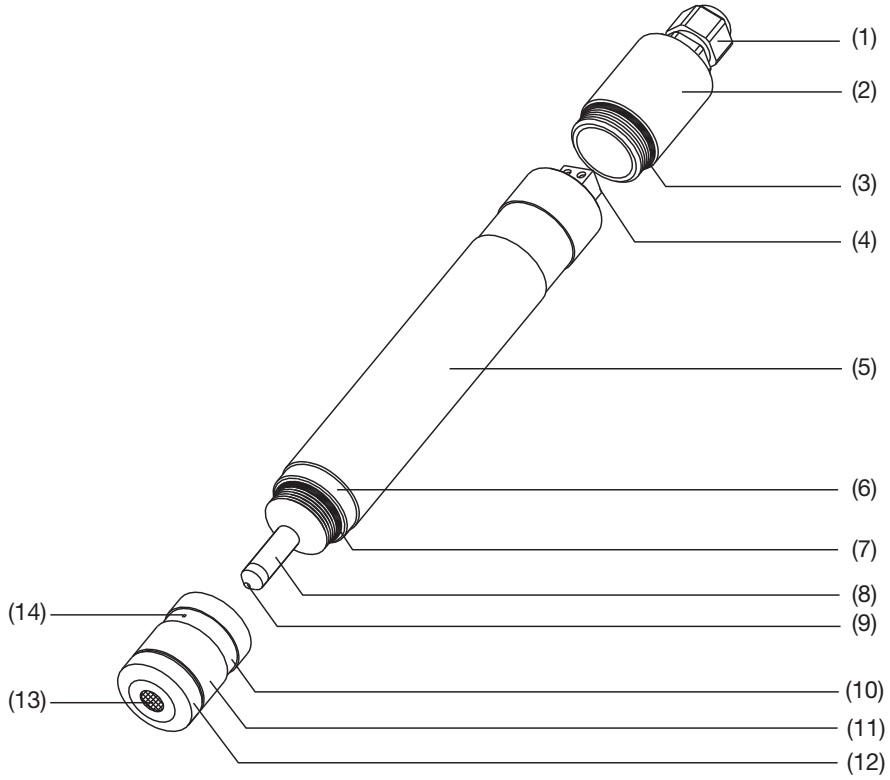

(1) Pg screw connection
(2) Cover
(3) O-ring
(4) 2-pin terminal for measuring cable connection
(5) Electrode shaft with integrated electronics
(6) Counter electrode (stainless steel)
(7) O-ring
(8) Electrode finger (reference electrode)
(9) Measurement electrode
(10) Transparent cover
(11) Membrane cap
(12) Membrane holder (stainless steel)
(13) Membrane
(14) Valve opening

Attention:

- The measurement is only possible in a suitable flow-through fitting (for example a flow-through fitting for sensors according to type sheets 202630, 202631, 202634 and 202636, part no.: 00392611).
- The process medium must be similar in quality to drinking or swimming pool water.
- The process medium must not contain any surfactants (surface-active substances, for example those in cleaning agents, detergents and disinfectants).
- The process medium must not contain any hydrophobic substances (for example oils and greases).

Attention:

- The membrane cap (10) should not be screwed on until startup of the instrument.

4.4 Technical data

Analyte	**Free chlorine**	
Membrane type	Hydrophobic PTFE membrane	Hydrophilic membrane
	Type 202630/40	Type 202630/41
Measuring cable connection	2-pin terminal, polyamide PG7 screw connection; wire cross section 2x 0.25 mm^2, cable diameter approx. 4 mm	
Voltage supply	U_B 12 to 30V DC (electrical isolation recommended)	
Electro-magnetic compatibility	According to EN 61326-1 Interference emission: Class B Interference immunity: To industrial requirements	
Output signal	4 to 20mA	
Burden	$\leq \frac{U_B - 7.5\ V}{0.02\ A}$	
Settling time	1 h	2 h
Incident flow velocity	approx. 15cm / s If the sensor is installed in the JUMO flow-through fitting (part no.: 00392611), this is equivalent to a flow rate of approx. 30l / h.	
Measurement ranges[1]	0 to 0.5 / 0 to 2.0 / 0 to 5 / 0 to 10mg / l (ppm)	
Resolution	0.001mg / l, for measurement range 0 to 0.5mg/l; 0.01mg / l, for measurement range 0 to 2.0mg / l	
Response time t_{90}	approx. 30 s	approx. 2 min
Operating temperatures / temperature compensation	+5 to +45 °C	

Zero point adjustment	Not required	
pH value operating range	6.0 to 8 pH Note the effect of the pH value on disinfecting properties, corrosion or the dissociation curve.	4 to 9 pH
pH dependency (loss of slope)	At pH 8 about 65 %, at pH 9 about 95 %, (starting from pH 7)	In the range from pH5 to 7: No loss of slope, at pH 8 about 10 %, at pH 9 about 20 % (starting from pH 7)
Disruptive substances / cross sensitivities	Chlorine dioxide not permitted Ozone not permitted	Chlorine dioxide not permitted Ozone not permitted combined chlorine disruptive
Pressure resistance	p_{abs} max. 2 bar p_{rel} max. 1 bar No pressure fluctuations are admissible when operating under pressure. We recommend unpressurized operation (atmospheric pressure).	
Material	Shaft, cover, cap: PVC	Shaft, cover, cap: PVC Membrane disk holder: stainless steel
Dimensions	Diameter: 25 mm, length: 220 mm	
Weight	approx 125 g	
Maintenance	Check the measurement signal: regularly, at least once a week Replace the membrane cap: once a year (subject to water quality) Change the electrolyte: every 3 to 6 months	
Storage	Sensor: frost-free, dry, without electrolyte and at +5 to +45 °C can be stored for an unlimited time Membrane cap: used membrane caps cannot be stored! Electrolyte: in the original bottle, protected against sunlight and at +5 to +25 °C	

[1] Other measuring ranges on request.

5.1 Notes

Attention:

- The measurement is only possible with a suitable flow-through fitting (for example a flow-through fitting for sensors according to type sheets 202630, 202631, 202634 and 202636, part no. 00392611; see type sheet 202630).
- The sensor should be operated unpressurized if possible with free discharge of the process medium. If that is not possible, the sensor can also be operated at a constant pressure of up to 1 bar (p_{rel}) or 2 bar (p_{abs}). Pressure fluctuations must be prevented!
- Air bubbles upstream from the membrane can distort the measurement signal.
- Both the transmitter and the sensor connected to it must remain continuously in operation even if the system is only operated at intervals. The supply voltage of the connected sensor must not be turned off!
- The sensor must not be left dry.
- The sensor must not be operated in chlorine-free water for longer than 1 day!
  There is a risk that accumulations or soiling (for example biological) could form on the membrane, thereby inhibiting or preventing the measurement of chlorine.
  After the sensor has been operated in chlorine-free water, you should count on a settling time for it to readapt. It may be necessary to add the dosage after a time delay!
- If no chlorine will be dosed for an extended period of time, the sensor must be disconnected from the transmitter/controller, removed and stored, See section 8.3 "Storage / transport", page 28.
- Oxidizing and reducing agents as well as corrosion protection agents may interfere with the measurement!

5.2 Flow-through fitting (part no. 00392611)

5.2.1 Mounting the fitting

The flow-through fitting can be fastened to a wall with an optional support bracket (part no. 00455706) or fastened to an installation panel.

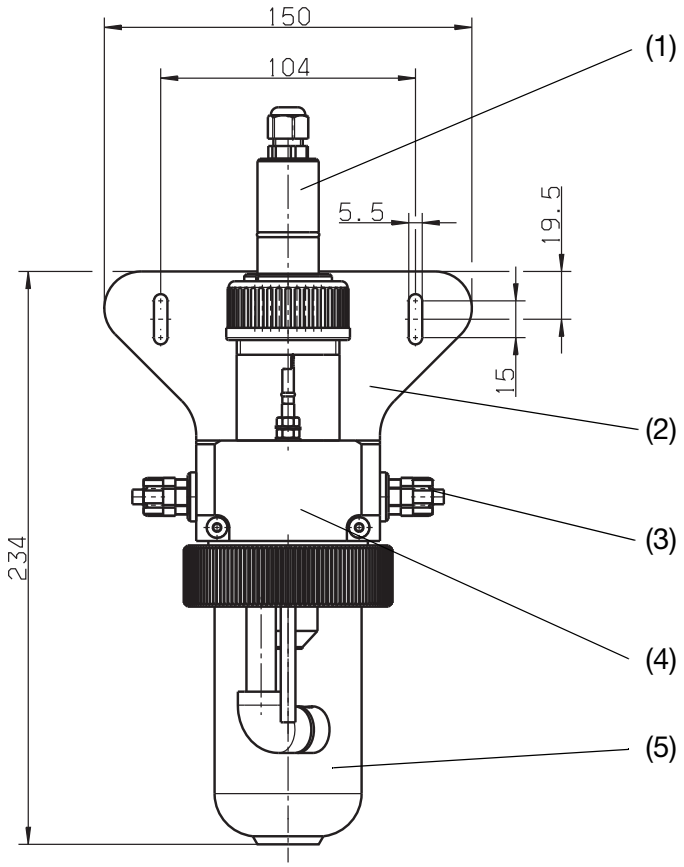

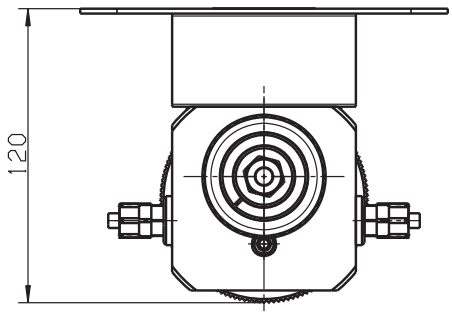

(1) Sensor

(2) Support bracket (optional)

(3) Connection G1/4 for hose ø 8mm x 6mm

(4) Fitting

(5) Removable measuring vessel (inspection glass)

5.2.2 Sensor installation

Overview

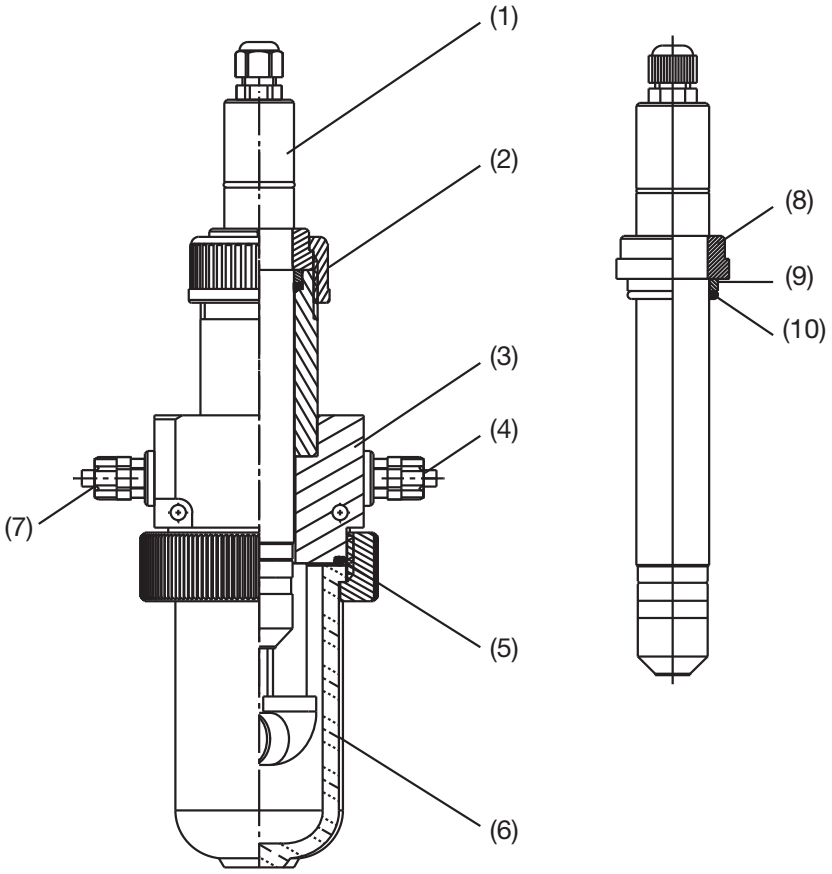

(1)	Sensor	(6)	Inspection glass
(2)	Union nut	(7)	Inlet G1/4A or DN10
(3)	Flow-through fitting	(8)	Stepped collar 1" [1]
(4)	Outlet G1/4A or DN10	(9)	Compression ring [1]
(5)	O-ring	(10)	O-ring [1]

[1] Part of the fitting.

Installation

Caution: When assembling and installing the sensor (1) make certain the O-rings and threads are clean and fully operational!

The transparent inspection glass (6) can be unscrewed from the fitting housing for maintenance purposes.

1. First push the O-ring (10) onto the sensor (1), then the compression ring (9) and over it the 1" stepped collar (8) (starting from the Pg screw connection). The stepped collar (8) must engage in the groove.

2. After the sensor has been prepared in this manner, insert it into the flow-through fitting (3) and fasten it in place with the union nut (2).

5.3 Flow monitoring

5.3.1 Minimum inflow

For proper operation, the incident flow of the process medium on the sensor must be at least 15 cm/s. This corresponds to a minimum flow rate of 30 l/h in the flow-through fitting.

Below this minimum incident flow velocity, the sensor will indicate values that are too low. This could result in dangerous overdosing in a connected control system.

Above this minimum incident flow velocity the measurement signal is only slightly affected by the incident flow velocity.

The monitoring system consists of a flow fitting (2) part no.: 00396470 and the flow monitor (1) (part no.: 00396471), See section 5.3.2 "Mounting", page 16.

The instrument can be used to monitor the minimum incident flow velocity of 15 cm/s.

5.3.2 Mounting

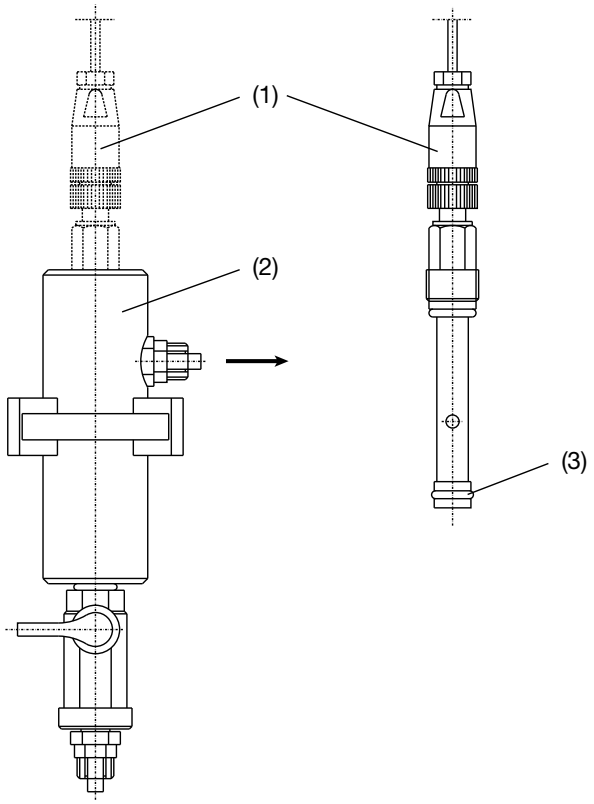

The O-ring (3) must be resting in the groove of the flow monitor (1).

1. Screw the flow monitor (1) into the fitting (2).

6.1 Sensor for free chlorine

6.1.1 General

- Cable diameter approx. 4 mm
- Conductor cross section 2 x 0.25 mm^2
- Lay signal lines isolated from cables with voltages of > 60 V
- Use a shielded cable with twisted wires
- Keep clear of large electrical installations

6.1.2 Terminal assignment

Connection	Screw terminals
Voltage supply DC 12 to 30 V	1 L+ 2 L-
Output 4 to 20 mA two wires Impressed current 4 to 20 mA in voltage supply	1 L+ 2 L-

6.1.3 Connection

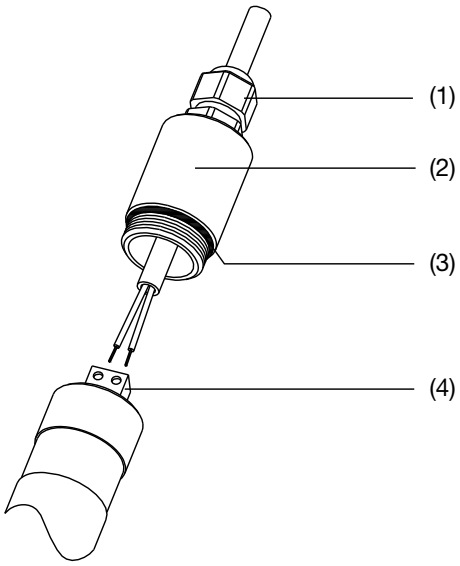

1. Push the cover (2) over the connecting cable.
2. Connect the wires to the terminals (4) according to the terminal assignment.
3. Screw on the cover (2) by hand until the O-ring (3) seals.
4. Tighten the Pg screw connection (1).

Attention:

When disconnecting, undo the Pg screw connection (1) first!

6.2 Flow monitor

6.2.1 Function

The contact (3+4) is opened starting at a flow velocity of 15 cm/s.

Stecker 4polig

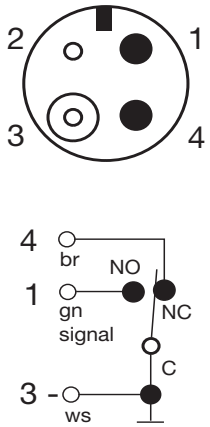

6.3 Example of a measurement section

6.3.1 Sensor

The electronics integrated into the shaft of the sensor for total chlorine (2) returns an uncalibrated 4 to 20 mA signal.

6.3.2 Indicator/controller

The signal can be further processed with the JUMO AQUIS 500 AS (1) or the JUMO dTRANS AS 02. The device provides the required supply voltage and makes for an easy way to calibrate the measuring system. The sensor for total chlorine can also be connected to other indicator, controller, recorder or PLC systems, however, provided the power supply and calibration allow it.

6.3.3 Connection

Danger:

Before making the connection, always read the JUMO AQUIS 500 AS (B 202568) operating manual!

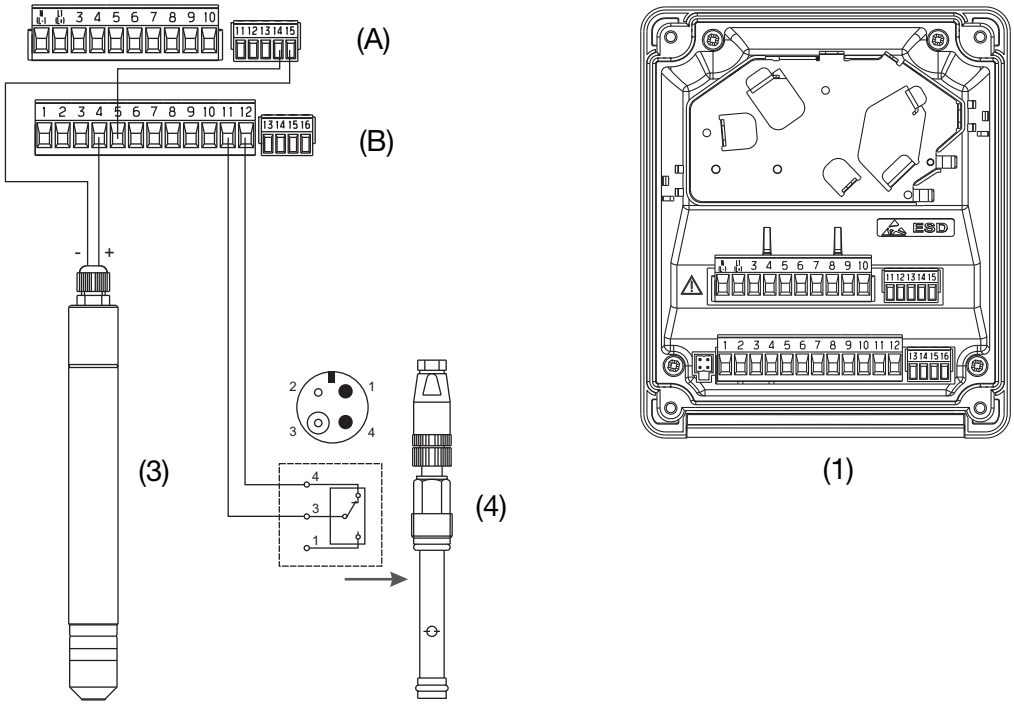

(1) JUMO AQUIS 500 AS, type 202568/20-888-888-888-310-310-23/000, see type sheet and operating manual 202568

(3) Sensor for total chlorine, see type sheet 202630

(4) Optional flow monitor part no.: 00396471, see type sheet 202630

(A) Row 1

(B) Row 2

6.3.4 Flow monitor

If the flow monitor (3) indicates too small a flow from the measuring cell (2), the binary input of the JUMO AQUIS 500 AS (1) switches, the instrument goes to "Hold" and an alarm is generated.

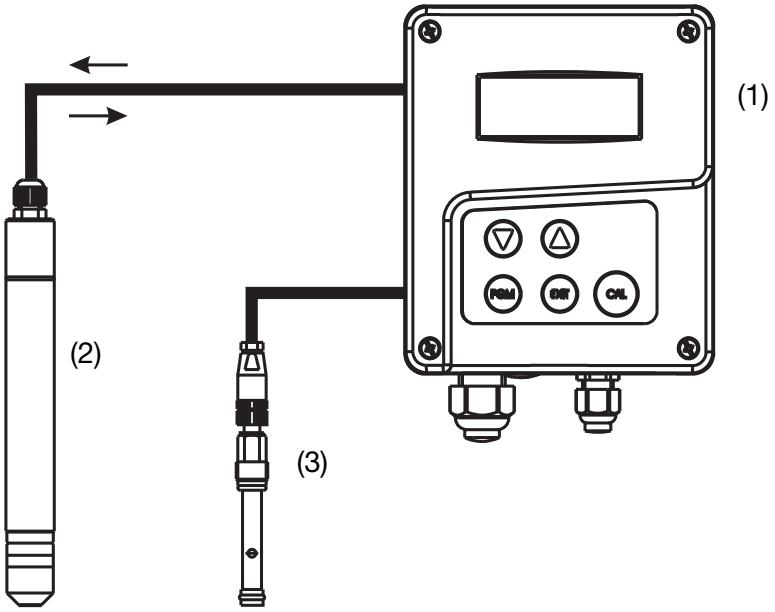

(1) JUMO AQUIS 500 AS, type 202568/20-888-888-888-310-310-23/000, see type sheet and operating manual 202568

(2) Sensor for total chlorine, see type sheet 202630

(3) Flow monitor part no.: 00396471, see type sheet 202630

7.1 Screwing the membrane cap off and on

Caution: The electrolyte may spray out of the valve opening (5) when the membrane cap is screwed on! Wear safety goggles!

Wash off sprayed liquid (aqueous solution of an alkali halide) under flowing water.

Caution: Do not touch the electrode finger (3/4) or get it dirty!

The steps must be performed exactly as they are described below!

The membrane of the sensor is very sensitive. Make certain when screwing the membrane cap on and off that the membrane is not destroyed by vacuum or excess pressure.

Always wait before screwing the membrane cap onto the sensor until just before it is installed in a fitting! The sensor is very sensitive when it is completely assembled!

When it is in a condition ready for measuring (membrane cap screwed on completely), the sensor must not be pushed open with the membrane (8). This will damage it and make it unusable!

Screw on the membrane cap (7) completely (as far as it will go)! The sealing O-ring (2) offers the first resistance against screwing in the membrane cap. Continue screwing in the membrane cap (7) until it is touching the shaft (1) of the sensor!

7.2 Topping up reference electrolyte

The service life of the electrolyte is about 3 to 6 months.

7.2.1 Type 202630/40

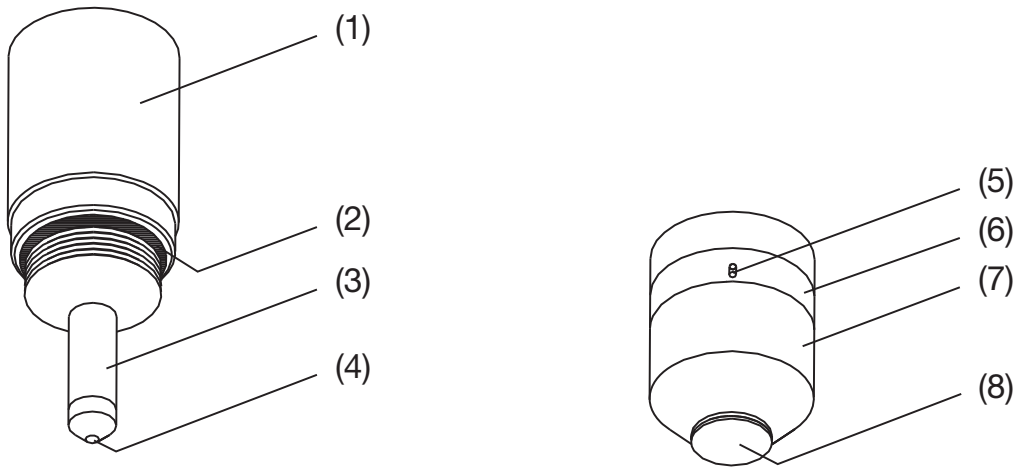

1. Use a small screwdriver or similar tool to raise the transparent cover (6) of the valve opening (5) close to the valve opening and push it somewhat to the side. The valve opening (5) is now open.

2. Screw the membrane cap (7) off the shaft (1) of the sensor.
3. Push the transparent cover (6) back in place until the cover is resting in the slot again and the valve opening closes.

4. Discard the used electrolyte, clean the membrane cap with clean water and then dry it.
5. Fill the membrane cap (7) up to the brim with enclosed electrolyte **with no bubbles**.

6. Holding the shaft (1) of the sensor vertically, **tightly** screw it onto the filled membrane cap (7), making certain as you do so that no excess electrolyte can escape from the valve opening (5).

7.2.2 Type 202630/41

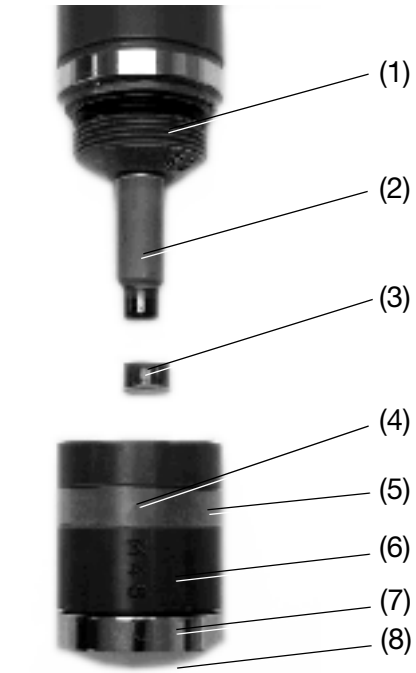

1. Use a small screwdriver or similar tool to raise the transparent cover (5) of the valve opening (4) close to the valve opening and push it somewhat to the side. The valve opening (4) is now open.

Attention:

If the membrane cap (6) is screwed off while the valve opening is not opened (4), the membrane will be destroyed!

2. Screw the membrane cap (6) off the shaft (1) of the measuring cell.
3. Push the transparent cover (5) back in place until the cover is resting in the slot again and the valve opening closes.
4. Discard the used electrolyte, clean the membrane cap (6) and device holder (3) with clear water and then dry.

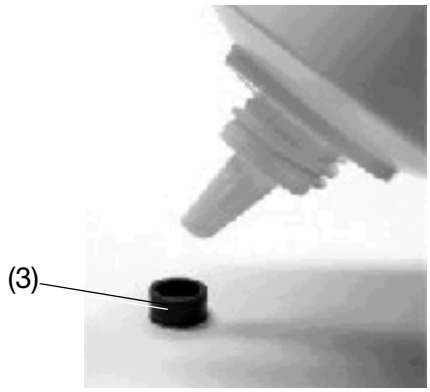

5. Fill the membrane cap (6) and G-holder (3) up to the brim with enclosed

electrolyte **with no bubbles**.

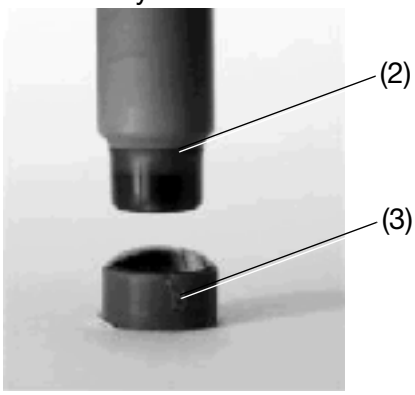

6. While holding the electrode shaft vertical, carefully press the electrode finger (2) into the filled G-holder (3).
7. Open the valve opening (4) as described above.
8. Holding the shaft (1) of the measuring cell vertically, **slowly and tightly** screw it onto the filled membrane cap (7), making certain as you you do so that no excess electrolyte can escape from the valve opening.

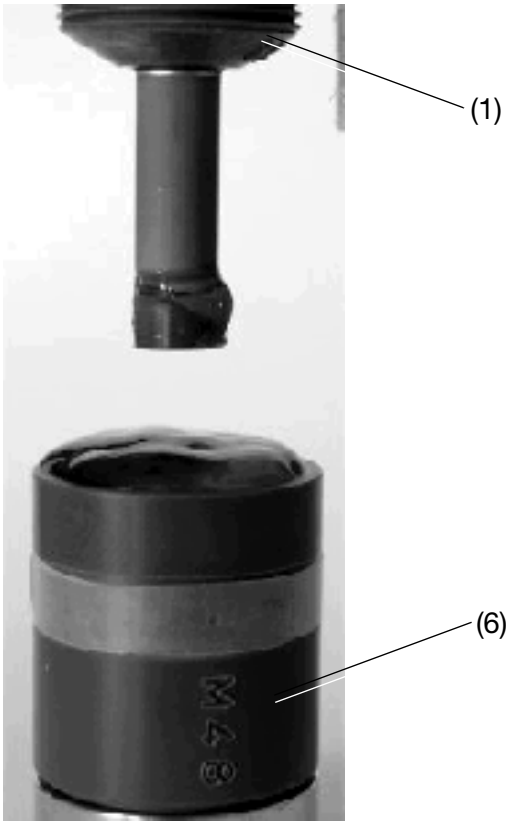

Attention:

The membrane cap (6) must be screwed tightly onto the electrode shaft (1)!

Flush off the electrolyte adhering to the outside with water.

7.2.3 Types 202630/40 and 202630/41

7.2.4 Settling time

The sensor will not provide a constant value until after the settling time has passed. It cannot be calibrated until then.

Type 202630/40: settling time 1 hour
Type 202630/41: settling time 2 hours

The calibration procedure should be repeated on the day after initial startup.

8.1 Cleaning the electrode finger tip / replacing the membrane cap and electrolyte

Attention:

Do not rub the brown coating on the combined counter electrode and reference electrode (3) with special abrasive paper!

Do not touch the electrode finger (3/4) or get it dirty!

The steps must be performed exactly as they are described below!

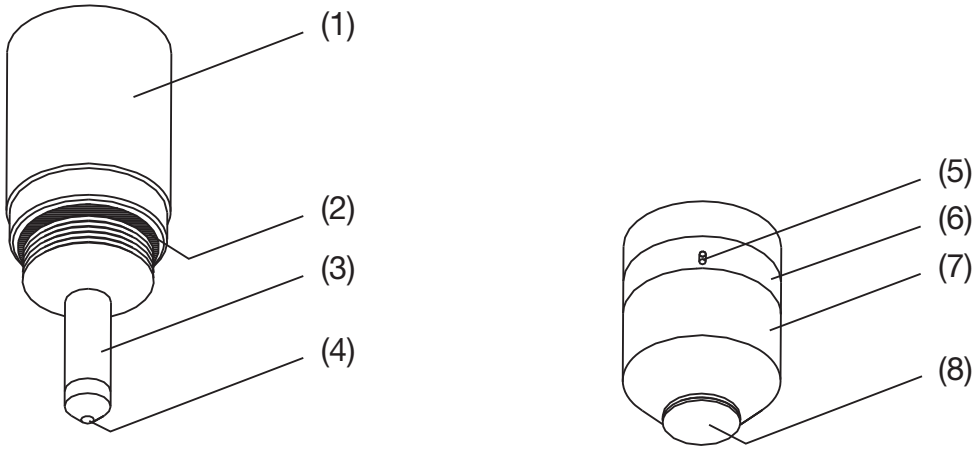

1. Unscrew the membrane cap from the shaft of the sensor, See section 7.1 "Screwing the membrane cap off and on", page 21.
2. Clean the electrode finger (3) and membrane cap (7) with distilled water and dry See section 7.2 "Topping up reference electrolyte", page 22.
3. Using the special abrasive paper, clean only the tip of the dried electrode finger (4). To do this place the special abrasive paper on a cleaning tissue with the matte side facing up, hold one corner firmly in place and while holding the sensor vertically, move the electrode tip two or three times over the special abrasive paper.

4. If necessary use a new membrane cap.
5. Fill the membrane cap (7) up to the brim with enclosed electrolyte **with no**

bubbles.

6. Screw the membrane cap onto the sensor shaft,
   See section 7.1 "Screwing the membrane cap off and on", page 21.

Note:

The service life of the electrolyte is 3 to 6 months. The service life of the membrane depends very much on the water quality.

Avoid heavy contamination of the membrane!

If the sensor still indicates values that are too low after the electrode finger tip has been cleaned, a new membrane cap must be used.

8.2 Remove scale that has accumulated on the membrane cap

1. Unscrew the membrane cap from the shaft of the sensor, See section 7.1 "Screwing the membrane cap off and on", page 21.
2. Flush away the electrolyte.
3. Place the membrane cap (7) in a 1% solution of hydrochloric acid for a few hours.
4. Before startup rinse off with distilled water.
5. Screw the membrane cap filled with electrolyte onto the shaft of the sensor.

8.3 Storage / transport

Attention:

Used membrane caps that have been in operation for longer than 1 day cannot be reused!

Preparation

1. Unscrew the membrane cap from the shaft of the sensor, See section 7.1 "Screwing the membrane cap off and on", page 21.
2. Flush away the electrolyte.
3. Rinse off the membrane cap and electrode finger (3) with distilled water and dry so no dust is left.
4. Screw the dry membrane cap (7) loosely onto the electrode shaft (1). The membrane (8) must not be resting against the electrode tip (4)!

Placing in operation again

1. Clean the electrode tip (4) with the enclosed special abrasive paper See "Cleaning the electrode finger tip / replacing the membrane cap and electrolyte", page 27.
2. Use a new membrane cap (7)!

8.4 Consumables / accessories

Designation	Part no.
Flow-through fitting for sensors according to type sheets 202630, 202631, 202634 and 202636	00392611
Support bracket for flow-through fitting	00455706
Flow monitor	00396471
Fitting for flow monitor	00396470
Spare parts set for 202630/40 (1x membrane cap, fine abrasive paper)	00392331
Spare parts set for 202630/41 (1x membrane cap, device holder, fine abrasive paper)	00402292
Special electrolyte for 202630/40, 100 ml	00438122
Special electrolyte for 202630/41, 100 ml	00438123
Matching indicator / controller: JUMO AQUIS 500 AS, Type: 202568/20-888-888-888-310-310-23/000 (for other versions see type and price sheet 202568)	00528718
Matching transmitter / controller: JUMO dTRANS AS 02, Type: 202553/01-8-01-4-0-00-23/000 (for other versions see type and price sheet 202553)	00550842

9 Calibration

9.1 General

Depending on requirements, the sensor should be checked and calibrated on a regular basis at set time intervals. Recommendation: weekly or more frequently depending on accuracy requirements.

Note:

The process for verification and calibration is as follows:

1. Take a sample of the medium in the immediate vicinity of the sensor.
2. Determine the concentration of the substance with a reference method.
3. Use the reference value that was determined to adjust the slope of the indicator.

9.2 Calibration with a indicator/control instrument

Reference method

Note:

Suitable reference methods for calibration may be found for example in standard DIN EN ISO 7393-2
Photometric determination with the **DPD** method is frequently used for calibration (DPD = N,N-**d**iethyl-1,4-**p**henylene**d**iamine). Suitable testing systems are commercially available. Providers include VWR International (previously Merck) (Spectroquant®), Macherey-Nagel (Nanocolor®) etc.

Initial condition

- The display format and measurement range have been set; see the operating manual of the indicator/control instrument in use.
- The sensor is installed in a suitable flow-through fitting, See section 5 "Mounting", page 13.
- The settling time of the sensor (2 hours) has elapsed **and** the measured value is stable.

Procedure

1. Take a water sample at the flow-through fitting outlet (or in the immediate vicinity of it).
2. Determine the analyte concentration (free chlorine, chlorine dioxide or ozone) of the sample with a suitable reference method.
3. Adjust the indicator to the reference value; see the operating manual of the transmitter/controller you are using.

Check the saved slope

Many transmitters/controllers (for example JUMO AQUIS 500 AS) have a "calibration log". Relevant data from each calibration is saved in the log.

Attention:

If the value for the slope falls below 40%, the membrane cap and electrolyte must be replaced and the electrode tip must be cleaned, See section 8.1 "Cleaning the electrode finger tip / replacing the membrane cap and electrolyte", page 27.

Setting the slope manually

See the operating manual for the transmitter/controller you are using.

Zero-point adjustment

A zero-point adjustment is **not** required for the sensors described in this operating manual. If there is no analyte present in the process medium, approximately zero is indicated. The zero point is **independent** of changes in the flow rate, conductivity, temperature and pH value.

10 Eliminating errors and faults

Error/fault	Possible cause	Remedy	Preventive measures
(1) Sensor output signal too high or too low.	Incorrect calibration.	Repeat calibration using the DPD method See "Initial condition", page 30.	If necessary calibrate the sensor more frequently.
(2) Sensor output signal is too low. Sensor cannot be adjusted to the DPD value.	Settling time too short.	Wait at least 2 hours.	
	Deposit on the tip of the electrode finger (measuring electrode).	Clean tip of electrode finger.	If necessary shorten maintenance intervals.
	Incident flow on sensor too low.	Increase incident flow.	Monitor minimum inflow.
(3) Sensor output signal is too low. Sensor cannot be adjusted to the DPD value. or else the sensor output signal decreases or remains constant while the DPD value increases or the signal fluctuates	Membrane destroyed: Electrolyte escaping - process medium entering.	Replace membrane cap.	Avoid damaging the membrane. Do not knock the sensor when the membrane cap is screwed on. Avoid incident flow containing coarse pieces or glass splinters.
	Coating on the membrane cap.	Replace membrane cap.	
	Gas bubbles on the outside of the membrane.	Increase the flow briefly.	Check mounting and change if necessary.
	No electrolyte in the membrane cap.	Fill the membrane cap with electrolyte, See "Topping up reference electrolyte", page 22.	
(4) Sensor output signal is too high. Sensor cannot be adjusted to the DPD value.	In addition to the analyte, the process medium also contains other oxidizing agents, for example ClO_2, O_3.	Avoid adding these substances. Change the water.	Remove cleaning agents and disinfectants completely after use.
(5) The DPD and sensor values match and the trend of the redox measurement is correct, but the setpoint value is not maintained.	Incorrect control parameters.	Optimize the control parameters.	
	The amount of disinfectant dosed per unit of time is too high. Concentration is exceeded before the process medium reaches the sensor.	Reduce the amount added per unit of time. Reduce the concentration of disinfectant in the solution added.	
	System circulation is too slow.	Improve mixing.	Make structural changes to ensure more thorough mixing.

Error/fault	Possible cause	Remedy	Preventive measures
(6) Sensor value and DPD value do not match, sensor values fluctuate: too much / not enough.	Incorrect controller parameters.	Optimize the controller parameters.	
	System circulation is too slow.	Improve mixing.	Make structural changes to ensure more thorough mixing.
(7) Sensor is unusually slow in responding.	Membrane partially blocked by contamination such as lime or oil. This interferes with the disinfectant reaching the sensor.	Replace membrane cap.	Take steps to improve the water quality.
(8) Output signal of the sensor is 0.	Sensor connected to the transmitter/ controller with reverse polarity.	Connect the sensor correctly, See section 6 "Electrical connection", page 17.	
	Measuring lead broken.	Replace measuring lead.	
	Sensor faulty.	Send the sensor in to the manufacturer to have it checked/ repaired.	
	Transmitter/controller faulty.	Send the transmitter/ controller in to the manufacturer to have it checked/repaired.	

JUMO GmbH & Co. KG
Street address:
Moritz-Juchheim-Straße 1
36039 Fulda, Germany
Delivery address:
Mackenrodtstraße 14
36039 Fulda, Germany
Postal address:
36035 Fulda, Germany
Phone: +49 661 6003-0
Fax: +49 661 6003-607
E-mail: mail@jumo.net
Internet: www.jumo.net

JUMO Instrument Co. Ltd.
JUMO House
Temple Bank, Riverway
Harlow - Essex CM20 2DY, UK
Phone: +44 1279 63 55 33
Fax: +44 1279 63 52 62
E-mail: sales@jumo.co.uk
Internet: www.jumo.co.uk

JUMO Process Control, Inc.
8 Technology Boulevard
Canastota, NY 13032, USA
Phone: 315-697-5866
1-800-554-JUMO
Fax: 315-697-5867
E-mail: info.us@jumo.net
Internet: www.jumousa.com